UNIVERSITY OF CAMBRIDGE INTERNATIONAL EXAMINATIONS
General Certificate of Education
Advanced Subsidiary Level and Advanced Level

CANDIDATE NAME	
CENTRE NUMBER	
CANDIDATE NUMBER	

* 3 1 6 5 9 6 5 4 9 7 *

PHYSICS **9702/33**

Paper 31 Advanced Practical Skills 1 **May/June 2010**

2 hours

Candidates answer on the Question Paper.

Additional Materials: As listed in the Confidential Instructions.

READ THESE INSTRUCTIONS FIRST

Write your Centre number, candidate number and name on all the work you hand in.
Write in dark blue or black pen.
You may use a soft pencil for any diagrams, graphs or rough working.
Do not use staples, paper clips, highlighters, glue or correction fluid.
DO **NOT** WRITE IN ANY BARCODES.

Answer **both** questions.
You will be allowed to work with the apparatus for a maximum of one hour for each question.
You are expected to record all your observations as soon as these observations are made, and to plan the presentation of the records so that it is not necessary to make a fair copy of them.
You may lose marks if you do not show your working or if you do not use appropriate units.

Additional answer paper and graph paper should be used only if it becomes necessary to do so.
You are reminded of the need for good English and clear presentation in your answers.

At the end of the examination, fasten all your work securely together.
All questions in this paper carry equal marks.

For Examiner's Use	
1	
2	
Total	

This document consists of **9** printed pages and **3** blank pages.

© UCLES 2010

BLANK PAGE

You may not need to use all of the materials provided.

For Examiner's Use

1 In this experiment, you will investigate how the current through a semiconductor diode depends on the voltage across it.

(a) Assemble the circuit of Fig. 1.1.
Make sure that the diode is connected the correct way round.

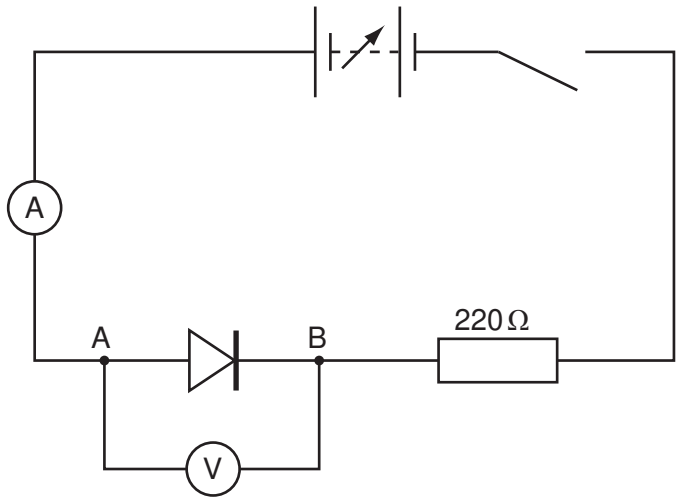

Fig. 1.1

(b) Set the power supply voltage to 12V and close the switch.
Record the voltmeter reading V and the ammeter reading I.
You should find that I is at least 0.02 A.

V = ...

I = ...

(c) Reduce the power supply voltage, recording V and I until you have six sets of readings.

Open the switch when you have finished your measurements.

Include in your table of results the values of V^{10}.
($V^{10} = V \times V \times V \times V \times V \times V \times V \times V \times V \times V$)

For Examiner's Use

(d) (i) Plot a graph of I on the y-axis against V^{10} on the x-axis.

(ii) Draw the straight line of best fit.

(iii) Determine the gradient and y-intercept of this line.

gradient = ...

y-intercept = ...

© UCLES 2010

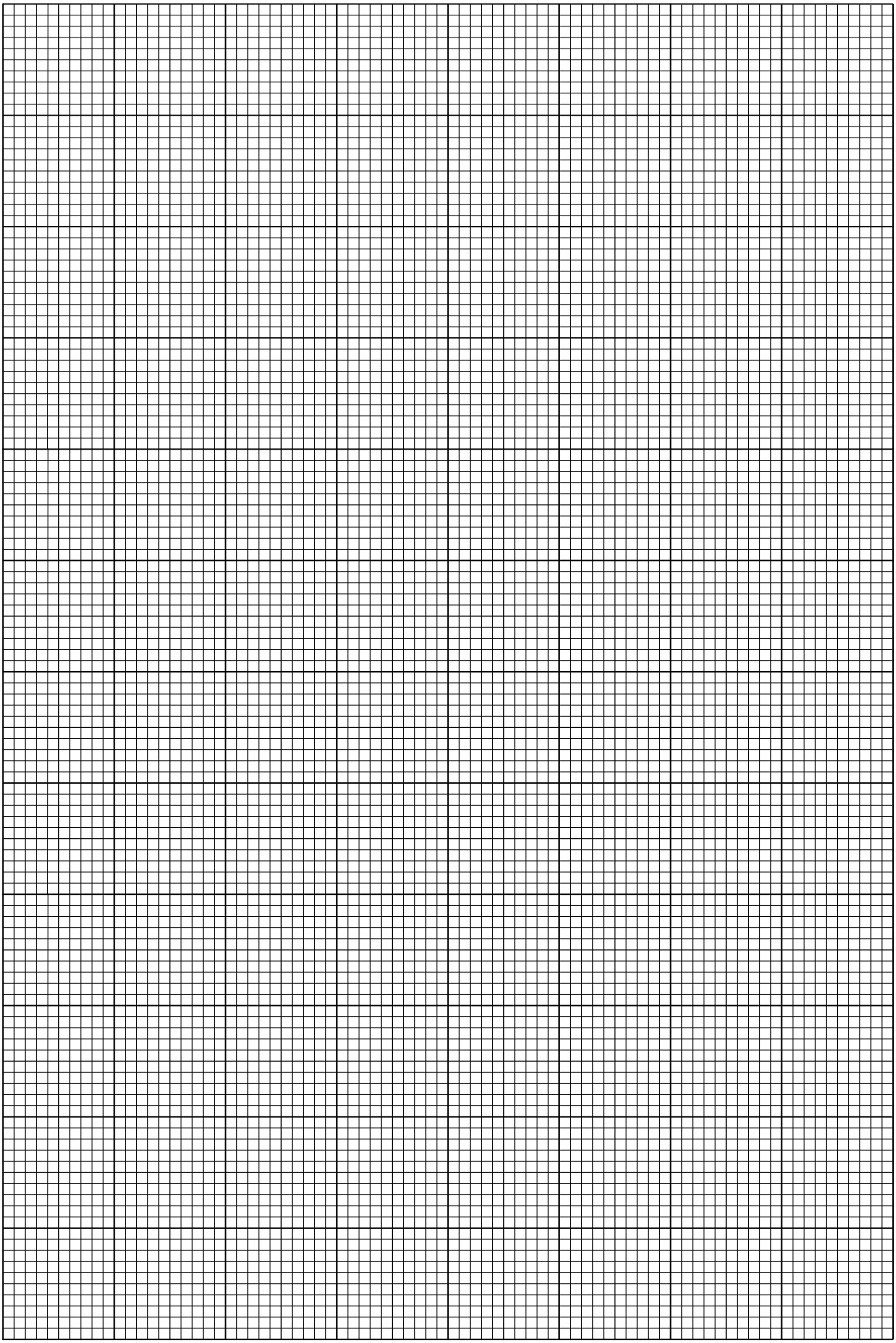

For Examiner's Use

(e) It is suggested that the relationship between I and V is

$$I = aV^{10} + b$$

where a and b are constants.

Using your answers from **(d)(iii)**, determine the values of a and b.
Give appropriate units.

For Examiner's Use

a = ...

b = ...

BLANK PAGE

Please turn over for Question 2.

You may not need to use all of the materials provided.

For Examiner's Use

2 In this experiment, you will investigate how the speed of a glass ball falling through oil depends on its size.

The apparatus has been set out for you as shown in Fig. 2.1.

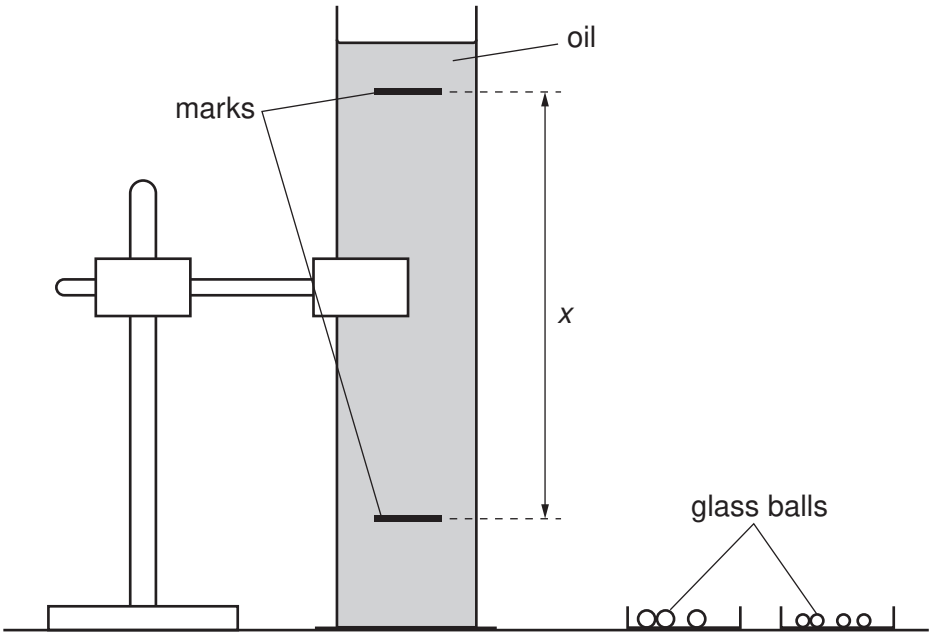

Fig. 2.1

(a) Measure and record the distance *x* between the upper and lower marks on the measuring cylinder.

x = ...

(b) (i) You have been provided with two different sizes of glass ball: large and small. Take measurements to determine the diameter d of the small glass balls.

For Examiner's Use

d = ... mm

(ii) Take measurements to determine the time t for a small glass ball to fall distance x through the oil.
Do not remove any balls from the oil. You may ask for more glass balls if needed.

t = ... s

(c) Estimate the percentage uncertainty in your value of t.

percentage uncertainty = ...

(d) Calculate the speed v of a small glass ball falling distance x through the oil.
$(v = \frac{x}{t})$

v = ...

© UCLES 2010

(e) Repeat **(b)** and **(d)** for the large glass balls.

For Examiner's Use

d = ... mm

t = ... s

v = ...

(f) It is suggested that the relationship between v and d is

$$v = kd^2$$

where k is a constant.

(i) Using your data, calculate two values of k.

first value of k = ...

second value of k = ...

(ii) Explain whether your results support the suggested relationship.

.....

.....

.....

(iii) Justify the number of significant figures that you have given for your values of k in **(i)**.

.....

.....

.....

© UCLES 2010

(g) (i) Describe four sources of uncertainty or limitations of the procedure in this experiment.

For Examiner's Use

1. .....

.....

2. .....

.....

3. .....

.....

4. .....

.....

(ii) Describe four improvements that could be made to this experiment. You may suggest the use of other apparatus or different procedures.

1. .....

.....

2. .....

.....

3. .....

.....

4. .....

.....

© UCLES 2010

BLANK PAGE

Permission to reproduce items where third-party owned material protected by copyright is included has been sought and cleared where possible. Every reasonable effort has been made by the publisher (UCLES) to trace copyright holders, but if any items requiring clearance have unwittingly been included, the publisher will be pleased to make amends at the earliest possible opportunity.

University of Cambridge International Examinations is part of the Cambridge Assessment Group. Cambridge Assessment is the brand name of University of Cambridge Local Examinations Syndicate (UCLES), which is itself a department of the University of Cambridge.

© UCLES 2010